## Spool valve intrinsically safe

**Flange construction**

- pilot operated
- 4/2-way impulse execution detented
- 4/3-way with spring centred mid position
- 4/2-way with spring reset
- $Q_{max}$ = 160 l/min
- $p_{max}$ = 350 bar

**NG10**
**ISO 4401-05**

Ex ia I Ma
Ex ia II C T5 / T6 Ga
Ex II 1 G Ex ia II C T6, T5
Ex I M1 Ex ia I Ma

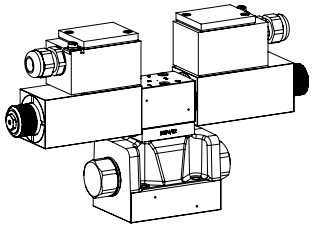

## DESCRIPTION

Pilot operated 4-way valve in a 5 chamber system. The control of the pilot valve takes place electrically. Very compact construction with corresponding low weight. The hydraulic control of the pilot valve can be internal or external via an additional connection plate or the mounting interface depending on the type of pilot operation. Spool detented or with spring reset. Intrinsic safety is achieved by limiting the electric energy in the solenoid circuit by means of a separate intrinsically safe power supply. Therewith sparking is prevented from forming.

## APPLICATION

These valves are suitable for applications in explosion-hazard areas, open cast and also in mines. The direction of movement is determined by the position of the spool and its symbol. Pilot operated valves are used where large volume flows have to be controlled. Switching performance and leakage of the valves must be taken into account when designing the system.

## SYMBOL

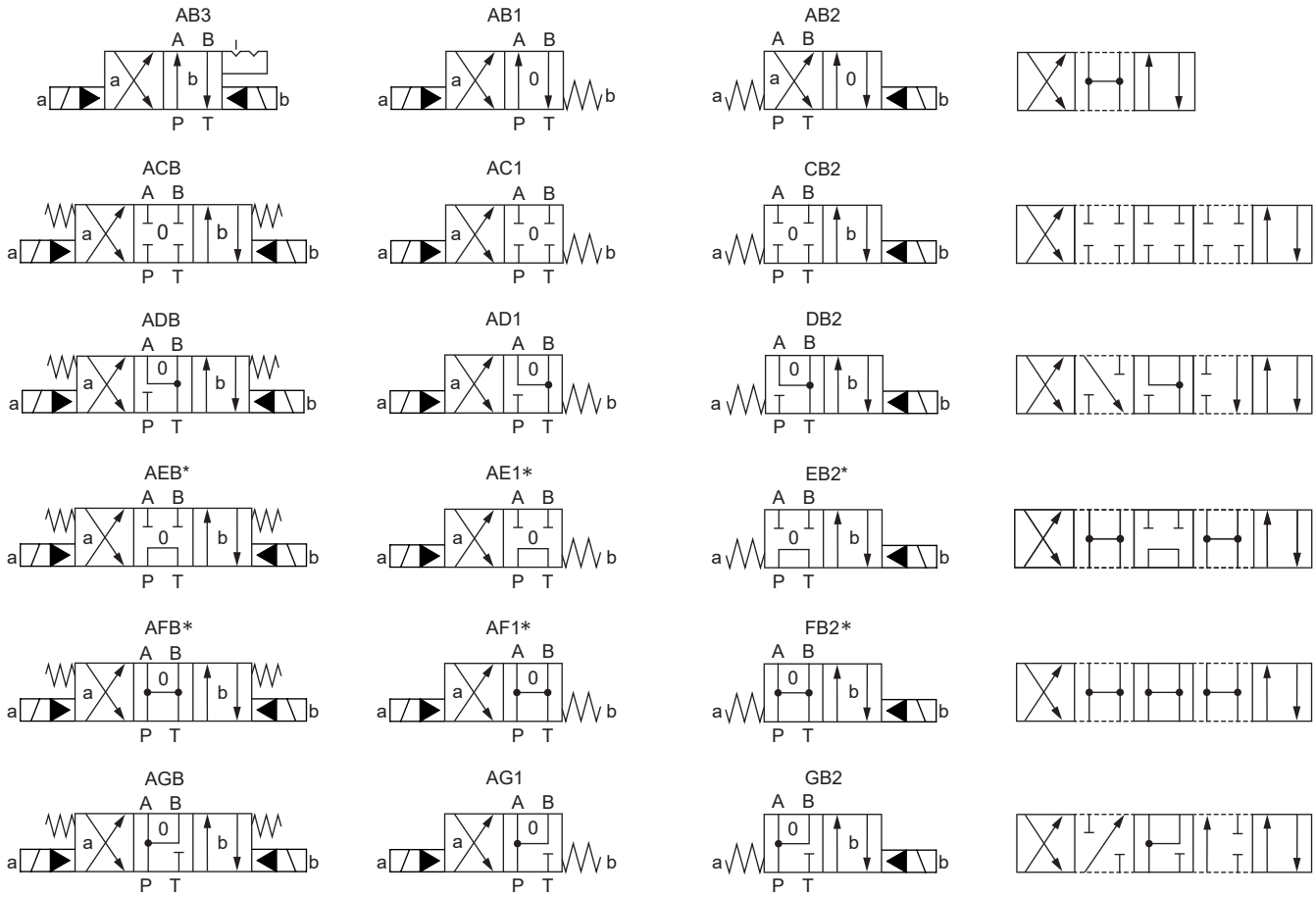


* When the connections P and T are connected in the middle position, a back pressure cartridge is built in as standard in the case of internal pilot oil supply (ti/pi). If this back pressure valve is not used (0, according to the type code), it must be ensured that a pilot pressure of minnimum 4 bar is present. The pressure difference of this cartridge has to be added to the pressure difference of the main valve (see characteristics) which results in an overall value. Pilot control type xi is not available with a back pressure cartridge.

Types of pilot operation

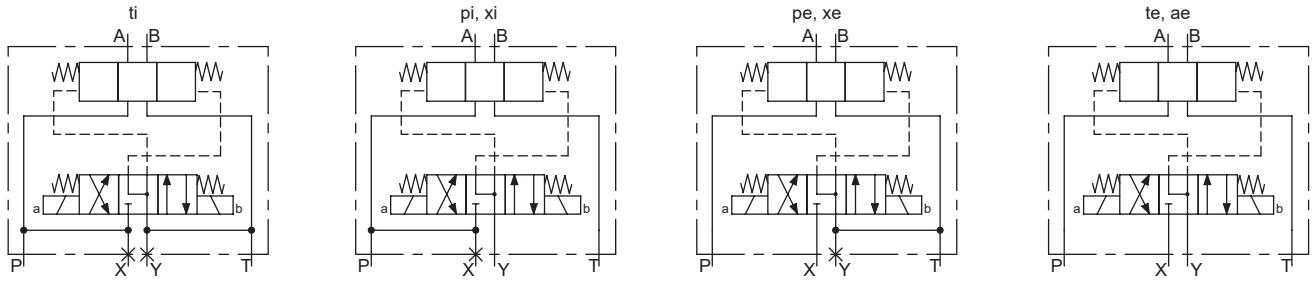


## TYPE CODE

WVZ F A10 - □ - □ - □ - □ / □ □ □ - □ # □

Spool valve pilot operated, Ex-protection execution Ex ia

Flange construction

International standard interface ISO NG10

Designation of symbols according to table

| | | | |
|---|---|---|---|
| Back pressure cartridge | Standard | | |
| | only symbols AEB and AFB without back pressure cartridge | o | see notes section symbols |

| | | | |
|---|---|---|---|
| Type of pilot operation: Control oil Supply (x) and drain (y) | (x) and (y) internally via control plate: | ti | |
| | (x) and (y) externally | te | |
| | (x) internally (y) externally | pi | |
| | (x) externally (y) internally | pe | |
| | via mounting interface: | | |
| | (x) and (y) externally | ae | |
| | (x) and (y) externally | xi | |
| | (x) externally (y) internally | xe | |

| | | | |
|---|---|---|---|
| Coil resistance | 100 Ω | 100 | |
| | 152 Ω | 152 | |

| | | | |
|---|---|---|---|
| Equipment group | I (Mining) | Z319 | only in combination with coil resistance 100 Ω |
| | II (Surface) | T6 | |

| | | |
|---|---|---|
| Connection execution | D | |
| | K | |

| | | |
|---|---|---|
| Sealing material | NBR | |
| | FKM (Viton) | D1 |

| | | | |
|---|---|---|---|
| Dampening orifices in control connections A and B | without orifice | | |
| | orifice Ø 0,5 mm | Ø 0,5 | provide for control pressure above 100 bar |

Design index (subject to change)

1.9-40

## GENERAL SPECIFICATIONS

| | |
|---|---|
| Designation | 4/2-, 4/3-spool valve |
| Mounting | Flange construction |
| Nominal size | NG10 according to ISO 4401-05 |
| Ambient temperature | -25…+45 °C (operation as T6)<br>-25…+60 °C (operation as T1…T5) |
| Weight | 5,4 kg (1 K-solenoid)<br>7,6 kg (2 K-solenoids) |
| MTTFd | 150 years |

## ACTUATION

Solenoid spool valve direct operated
Data sheet 1.3-28
WDZFA04-AB1 / AB2 for 4/2-way AB1 / AB2
WDZFA04-AD1 / DB2 for other 4/2-way
WDZFA04-ADB for 4/3-way with spring centred mid position
WDZFA04-ADB for 4/2-way impulse execution detented

## HYDRAULIC SPECIFICATIONS

| | |
|---|---|
| Working pressure | $p_{max}$ = 350 bar |
| Tank pressure | $p_{T\,max}$ = 160 bar (type of pilot operation te, pi, ae and xi)<br>$p_{T\,max}$ = 100 bar (type of pilot operation ti, pe and xe) |
| Pilot pressure | $p_{v\,min}$: 8…14 bar, see performance limits<br>$p_{v\,max}$ = 350 bar for connection X (control plate)<br>$p_{v\,max}$ = 200 bar for connection X (mounting interface) |
| Pressure pilot oil drain | minimum lower by $p_{v\,min}$ |
| Maximum volume flow | $Q_{max}$ = 160 l/min |
| Leakage oil | See characteristic and pilot valves |
| Fluid | Mineral oil, other fluid on request |
| Viscosity range | 12 mm²/s…320 mm²/s |
| Temperature range fluid | -25…+45 °C (operation as T6, NBR)<br>-20…+45 °C (operation as T6, FKM)<br>-25…+60 °C (operation as T1…T5, NBR)<br>-20…+60 °C (operation as T1…T5, FKM) |
| Contamination efficiency | Class 20 / 18 / 14 |
| Filtration | Required filtration grade ß 10…16 ≥ 75, see data sheet 1.0-50 |

## ELECTRICAL SPECIFICATIONS

| | |
|---|---|
| Protection class | IP65 |
| Relative duty factor | Continuous operation |
| Switching frequency | 1'800 / h |
| Service life time | $10^7$ (number of switching cycles, theoretically) |
| Voltage tolerance | ± 10 % with regard to nominal voltage |
| Limiting current at 50 °C | $I_{min}$ = 90 mA (100 Ω execuiton)<br>$I_{min}$ = 64 mA (152 Ω execuiton) |
| Temperature class | T1…T6 |
| Coil resistance | 100 Ω, 152 Ω |
| Minimum power consumption | $P_{min}$ = 0,81 W (100 Ω execution)<br>$P_{min}$ = 0,62 W (152 Ω execution) |

**Note!** Other electrical specifications, recommended power supply and safety-related limits see data sheet 1.1-185

## MANUAL OVERRIDE

HB4,5 as standard
Optionally: HN (K), HB0 (plugged)
→ see data sheet 1.1-311

## CERTIFICATES

| | Surface gas and dust | Mining |
|---|---|---|
| ATEX / UKEX | x | x |
| IECEx | x | x |
| CCC | x | x |

The certificates can be found on www.wandfluh.com

## PERFORMANCE SPECIFICATIONS

Oil viscosity $\upsilon$ = 30 mm²/s

Q = f (p) **Performance limits**
*Minimum pilot pressures measured with back pressure free pilot oil drain

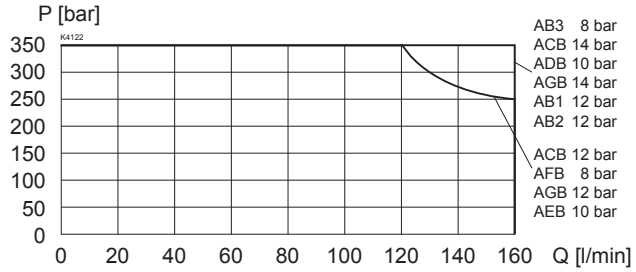


Q = f (p) **Leakage volume flow characteristic**
per control edge

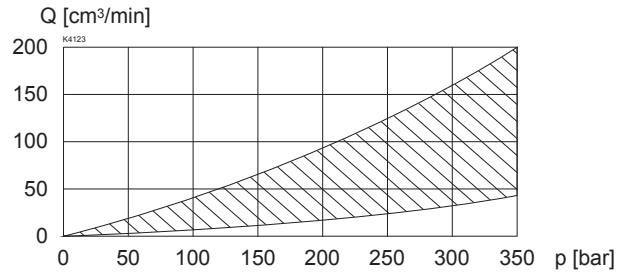


Δp = f (Q) **Pressure drop volume flow characteristics**
Spool type / flow direction

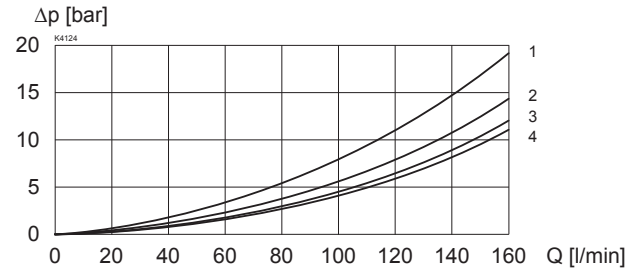


| | Volume flow direction | | | | |
|---|---|---|---|---|---|
| Symbol | P - A | P - B | P - T | A - T | B - T |
| AB1 / AB2 / AB3 | 3 | 3 | - | 2 | 1 |
| ACB / AC1 / CB2 | 3 | 3 | - | 2 | 1 |
| ADB / AD1 / DB2 | 3 | 3 | - | 2 | 1 |
| AEB / AE1 / EB2 | 3 | 3 | 1 | 2 | 1 |
| AFB / AF1 / FB2 | 2 | 2 | 4 | 4 | 2 |
| AGB / AG1 / GB2 | 2 | 2 | - | 2 | 1 |

Δp = f (Q) **Pressure drop volume flow characteristic**
Back pressure cartridge (in addition to P-A or P-B of the main valve)

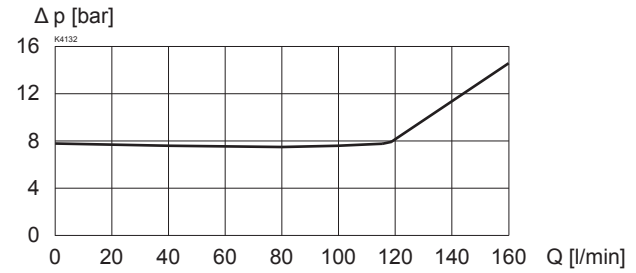


**Note!**

*Please ensure the minimum pilot pressure. Attention internal pilot connections: valves only switch when the pressure difference in the valve is high enough. Further details on request.

## SURFACE TREATMENT

- The main valve body, the distance plate, the screw plugs, the slip-on coil and the armature tube are zinc-nickel coated
- The pilot valve body is coated with a two component paint

## SEALING MATERIAL

NBR or FKM (Viton) as standard, choice in the type code

## DIMENSIONS

4/3-way spool valve (spring centring)
4/2-way spool valve (impulse)

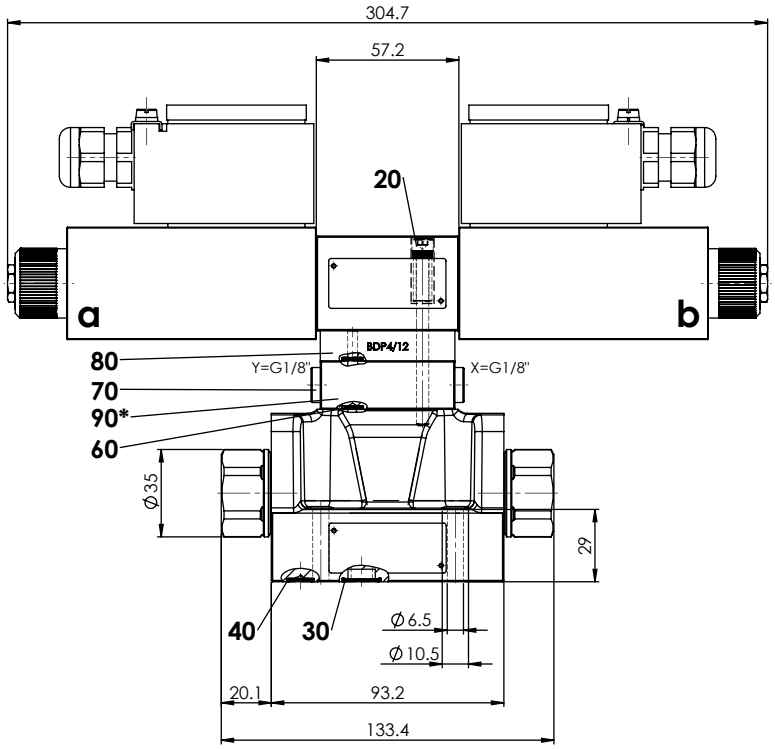


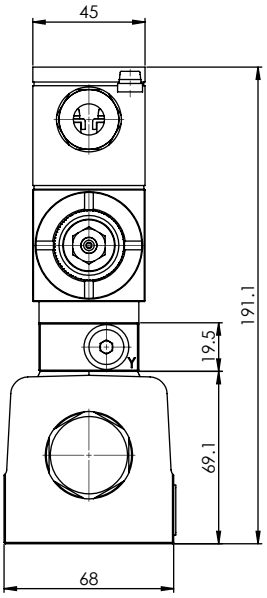


* Pos.90 Control plate with type of pilot operation te, pi, pe only

4/2-way spool valve (spring reset)

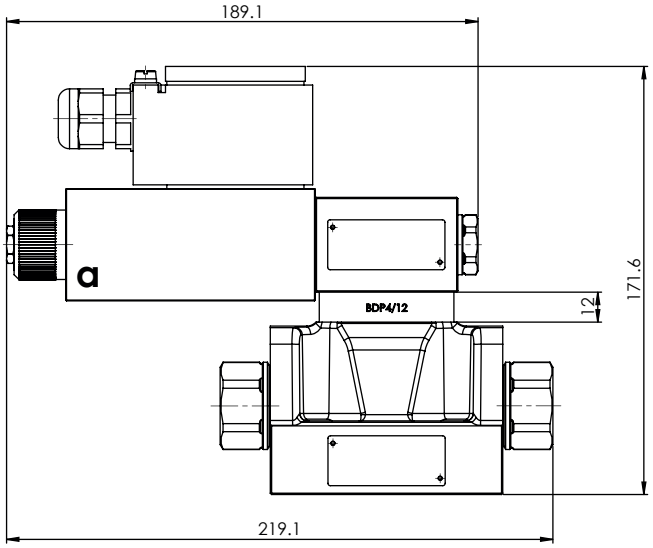

## HYDRAULIC CONNECTION

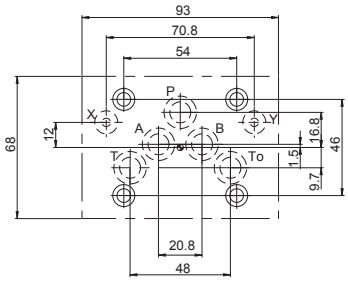


## PARTS LIST

| Position | Article | Description |
|---|---|---|
| 20 | 246.2151<br>246.2171 | Socket head screw M5 x 50 DIN 912<br>Socket head screw M5 x 70 DIN 912 |
| 70 | 238.1405 | Screw plug VSTI G1/8"-ED |
| 80 | 173.1400 | Spacer plate NG4 Mini |
| 90 | 173.1500 | Control plate NG4 Mini |
| | 251.2923 | Seal kit WV.FA10 |

**Seal kit consisting of:**

| | | |
|---|---|---|
| 30 | O-ring | ID 12,42 x 1,78 |
| 40 | O-ring | ID 7,65 x 1,78 |
| 60 | O-Ring | ID 5,28 x 1,78 |

## ACCESSORIES

| | |
|---|---|
| Fixing screws | Data sheet 1.0-60 |
| Threaded subplates | Data sheet 2.9-40 |
| Multi-station subplates | Data sheet 2.9-70 |
| Horizontal mounting blocks | Data sheet 2.9-110 |
| Technical explanations | Data sheet 1.0-100 |
| Filtration | Data sheet 1.0-50 |

## STANDARDS

| | |
|---|---|
| Explosion protection | Directive 2014 / 34 / EU (ATEX) |
| Mounting interface | ISO 4401-05 |
| Protection class | EN 60 529 |
| Contamination efficiency | ISO 4406 |

## COMMISSIONING

**Attention!** Intrinsically safe valves must be controlled only by a suitable, certified power supply from out of the hazardous area (see Operating Instructions). The selection of the power supply and the wiring must be carried out by qualified personnel. Recommended power supplies and safety-related limit values according to data sheet 1.1-185

## INSTALLATION NOTES

| | |
|---|---|
| Mounting type | Flange mounting<br>4 fixing holes for<br>socket head screws M6 x 40 |
| Mounting position | Any, preferably horizontal |
| Tightening torque | $M_D$ = 13.5 Nm ± 10 %, quality min. 10.9<br><br>$M_D$ = 10.5 Nm ± 10 %, quality 8.8:<br><br>◆ maximum tank pressure without external connections: 80 bar<br>◆ maximum tank pressure and maximum pressure external connections: 35 bar |

**Note!** The length of the fixing screw depends on the base material of the connection element.

**Wandfluh AG** Postfach CH-3714 Frutigen
Tel. +41 33 672 72 72 Fax +41 33 672 72 12 sales@wandfluh.com